इंटरनेट मानक

Disclosure to Promote the Right To Information

Whereas the Parliament of India has set out to provide a practical regime of right to information for citizens to secure access to information under the control of public authorities, in order to promote transparency and accountability in the working of every public authority, and whereas the attached publication of the Bureau of Indian Standards is of particular interest to the public, particularly disadvantaged communities and those engaged in the pursuit of education and knowledge, the attached public safety standard is made available to promote the timely dissemination of this information in an accurate manner to the public.

"जानने का अधिकार, जीने का अधिकार"
Mazdoor Kisan Shakti Sangathan
"The Right to Information, The Right to Live"

"पुराने को छोड नये के तरफ"
Jawaharlal Nehru
"Step Out From the Old to the New"

IS 5613-2-1 (1985): Code of practice for design, installation and maintenance of overhead power lines, Part 2: Lines above 11 kV and upto and including 220 kV, Section 1: Design [ETD 37: Conductors and Accessories for Overhead Lines]

"ज्ञान से एक नये भारत का निर्माण"
Satyanarayan Gangaram Pitroda
"Invent a New India Using Knowledge"

RIGHT TO INFORMATION

Made Available By Public.Resource.Org

"ज्ञान एक ऐसा खजाना है जो कभी चुराया नहीं जा सकता है"
Bhartṛhari—Nītiśatakam
"Knowledge is such a treasure which cannot be stolen"

BLANK PAGE

BRUTUM FULMEN

IGNORANTIA JURIS NON EXCUSAT

PROTECTED BY COPYRIGHT

Indian Standard

CODE OF PRACTICE FOR DESIGN, INSTALLATION AND MAINTENANCE OF OVERHEAD POWER LINES

PART 2 LINES ABOVE 11 kV AND UP TO AND INCLUDING 220 kV

Section 1 Design

(First Revision)

First Reprint AUGUST *1993*

UDC 621·315·17·027·6·6 /·8 : 006·78

© *Copyright* 1986

BUREAU OF INDIAN STANDARDS
MANAK BHAVAN, 9 BAHADUR SHAH ZAFAR MARG
NEW DELHI-110002

Gr 7 *April* 1986

Indian Standard

CODE OF PRACTICE FOR DESIGN, INSTALLATION AND MAINTENANCE OF OVERHEAD POWER LINES

PART 2 LINES ABOVE 11 kV AND UP TO AND INCLUDING 220 kV

Section 1 Design

(First Revision)

Conductors and Accessories for Overhead Lines Sectional Committee, ETDC 60

Chairman	*Representing*
SHRI R. D. JAIN	Rural Electrification Corporation Ltd, New Delhi
Members	
SHRI G. L. DUA (*Alternate* to Shri R. D. Jain	
ADDITIONAL GENERAL MANAGER (IT)	Indian Posts & Telegraphs Department, New Delhi
DIVISIONAL ENGINEER (TALE) C/P (*Alternate*)	
SHRI M. K. AHUJA	Delhi Electric Supply Undertaking, New Delhi
SHRI V. P. ANAND	Electrical Manufacturing Co Ltd., Calcutta
SHRI S. C. MALHOTRA (*Alternate*)	
SHRI R. S. ARORA	Directorate General of Supplies and Disposals, New Delhi
SHRI J. S. PASSI (*Alternate*)	
SHRI R. T. CHARI	Tag Corporation, Madras
SHRI A. ARUNKUMAR (*Alternate*)	
SHRI R. S. CHAWLA	Industrial Fasteners & Gujarat Pvt Ltd, Vododara
SHRI D. P. MEHD (*Alternate*)	
CHIEF ENGINEER (T R & PLANNING)	Maharashtra State Electricity Board, Bombay
SUPTD ENGINEER (400 kV) (*Alternate* I)	
SUPTD ENGINEER (200 kV) (*Alternate* II)	
SHRI M. R. DOCTOR	Special Steels Ltd, Bangalore
SHRI V. C. TRICKUR (*Alternate*)	

(*Continued on page 2*)

© *Copyright* 1986
BUREAU OF INDIAN STANDARDS
This publication is protected under the *Indian Copyright Act* (XIV of 1957) and reproduction in whole or in part by any means except with written permission of the publisher shall be deemed to be an infringement of copyright under the said Act.

(*Continued from page 1*)

Members	*Representing*
DIRECTOR	Central Power Research Institute, Bangalore
SHRI T. V. GOPALAN (*Alternate*)	
DIRECTOR (TRANSMISSION)	Central Electricity Authority (Transmission Directorate), New Delhi
DEPUTY DIRECTOR (TRANSMISSION) (*Alternate*)	
DIRECTOR (TI), RDSO	Ministry of Railways
JOINT DIRECTOR (TI)-I (*Alternate*)	
SHRI M. K. JUNJHUNWALA	Cable and Conductor Manufacturers Association of India, New Delhi
SHRI T. S. PADMANABHAN (*Alternate*)	
SHRI H. C. KAUSHIK	Haryana State Electricity Board, Chandigarh
SHRI K. B. MATHUR	U. P. State Electricity Board, Lucknow
SHRI V. B. SINGH (*Alternate*)	
SHRI B. MUKHOPADHYAY	National Test House, Calcutta
SHRI U. S. VERMA (*Alternate*)	
SHRI N. D. PARIKH	KEC International Ltd, Bombay
SHRI S. D. DAND (*Alternate*)	
SHRI C. K. RAGUNATH	Tamil Nadu Electricity Board, Madras
SHRI M. U. K. MENON (*Alternate*)	
SHRI A. K. RAMACHANDRA	National Thermal Power Corporation Ltd, New Delhi
SHRI S. S. RAO (*Alternate*)	
SHRI R. P. SACHDEVA	Bhakra Beas Management Board, Chandigarh
SHRI H. S. CHOPRA (*Alternate*)	
SHRI S. N. SENGUPTA	National Insulated Cable Co of India Ltd, Calcutta
SHRI B. GANGULY (*Alternate*)	
SHRI V. K. SHARMA	National Hydro-Electric Power Corporation Ltd, New Delhi
SHRI MAHENDRA KUMAR (*Alternate*)	
SHRI R. D. SHETH	Eletro-Metal Industries, Bombay
SHRI G. J. DEVASSYKUTTY (*Alternate*)	
SHRI T. SINGH	Indian Cable Co Ltd, Calcutta
SHRI S. K. GUPTA (*Alternate*)	
SHRI D. SIVASUBRAMANIAM	Aluminium Industries Ltd, Kundara
SHRI K. M. JACOB (*Alternate*)	
PROF M. VENUGOPAL	Indian Institute of Technology, Madras
PROF Y. NARAYANA RAO (*Alternate*)	
SHRI WADHWA	Tata Hydro-Electric Supply Co Ltd, Bombay
SHRI P. P. BHISEY (*Alternate*)	
SHRI S. P. SACHDEV, Director (Elec tech)	Director General, ISI (*Ex-officio Member*)

Secretary

SHRI SUKH BIR SINGH

Deputy Director (Elec tech)

Indian Standard

CODE OF PRACTICE FOR DESIGN, INSTALLATION AND MAINTENANCE OF OVERHEAD POWER LINES

PART 2 LINES ABOVE 11 kV AND UP TO AND INCLUDING 220 kV

Section 1 Design

(First Revision)

0. FOREWORD

0.1 This Indian Standard (First Revision) was adopted by the Indian Standards Institution on 23 January 1985, after the draft finalized by the Conductors and Accessories for Overhead Lines Sectional Committee had been approved by the Electrotechnical Division Council.

0.2 The design, installation and maintenance practices of overhead power lines vary widely from state to state and in various organizations. This variation leads to uneconomic designs and higher installation and maintenance cost. The necessity was, therefore, felt to prepare a standard code on this subject which should result in unification of designs of overhead lines and also in saving of cost.

0.3 This standard was first published in 1976. The revision of this standard has been undertaken to include the developments that have taken place since the last publication of this standard.

0.4 This standard is being prepared in the following three parts:

Part 1 Lines up to and including 11 kV,

Part 2 Lines above 11 kV and up to and including 220 kV, and

Part 3 Lines above 220 kV.

Each part has been further divided in two sections. Section 1 of each part covers design aspects while Section 2 covers installation and maintenance of overhead power lines.

0.5 For the purpose of deciding whether a particular requirement of this standard is complied with, the final value, observed or calculated, expressing the result of a test, shall be rounded off in accordance with IS : 2-1960*. The number of significant places retained in the rounded off value should be the same as that of the specified value in this standard.

---

1. SCOPE

1.1 This code (Part 2/Sec 1) covers design of overhead power lines above 11 kV and up to and including 220 kV.

1.2 This code does not cover switching control, relay protection, coordination with telecommunication lines and radio interference.

2. TERMINOLOGY

2.1 For the purpose of this code, the definitions given in IS : 1885 (Part 32)-1971† and the Indian Electricity Rules, 1956 shall apply.

3. GENERAL

3.1 Conformity with Indian Electricity Rules and Regulations of Other Authorities — All overhead lines shall comply with the requirements of the Indian Electricity Act and Rules made thereunder, and the regulations or specifications as laid down by railways or railway electrification authorities, post and telegraphs, roadway or navigation or aviation authorities, local governing bodies, defence authorities and power and telecommunication coordination committee, wherever applicable. Relevant matters requiring attention of such authorities should be referred to them and their approval obtained before planning the layout and installation and during construction work Such references, however, be made by owner of the installations and within appropriate time so as to ensure smooth progress. The Rules No. 29, 51, 74 to 93 of the Indian Electricity Rules, 1956 are particularly applicable.

3.2 It is essential that before proceeding with the designs the site conditions are known as best as possible The available design should further be oriented taking into account the difficulties likely to be encountered during installation and maintenance.

---

*Rules for rounding off numerical values (*revised*).

†Electrotechnical vocabulary: Part 32 Overhead transmission and distribution of electrical energy.

4. CHOICE OF ROUTE

4.1 The proposed route of line should be the shortest practicable distance. The following factors shall be considered in the choice of the route:

a) It is advantageous to lay the line near to and along roadway or railway.

b) The route should be as short and as straight as possible.

c) The number of angle towers should be minimum and within these the number of heavier angle towers shall be as small as possible.

d) Good farming areas, uneven terrain, religious places, civil and defence installations, industries, aerodromes and their approach and take-off funnels, public and private premises, ponds, tanks, lakes, gardens and plantations should be avoided as far as practicable.

e) Cost of securing and clearing right-of-way (ROW), making access roads and the time required for these works should be minimum.

f) The line should be as away as possible from telecommunication lines and should not run parallel to these.

g) Crossings with permanent objects, such as railway lines and roads should be minimum and preferably at right angles. (Reference shall be made to the appropriate Railways Regulations and Railways Electrification Rules as well as Civil Authorities for protection to be provided for railway and road crossings respectively. Guarding may not be necessary if fast acting protective devices are provided.)

h) Difficult and unsafe approaches should be avoided.

j) A detour in the route is preferable so that it should be capable of taking care of future load developments without major modifications.

k) The line should be away from the buildings containing explosives, bulk storage oil tanks, oil or gas pipelines.

4 2 In case of hilly terrain having sharp rises and falls in the ground profile, it is necessary to conduct detailed survey and locate the tower positions before finalizing the tower and line design data. This will provide most economical proposition for the installation.

5. ELECTRICAL DESIGN

5.1 General — The electrical design of the lines shall be carried out in accordance with the established methods of analysis taking into consideration the power system as a whole, and shall cover the following.

5.1.1 *Transmission Voltage* — The voltage shall be in accordance with the recommendations of IS : 585-1962*. Besides other considerations, the following factors should be looked into before making the choice of voltage:

a) Magnitude of the power to be transmitted,

b) Length of the line,

c) Cost of the terminal equipment, and

d) Economy consistent with the desired reliability.

5.1.2 *Insulation Requirements* — The insulation levels shall be selected in accordance with IS : 2165 (Part 1)-1977†, IS : 2165 (Part 2)-1983‡ and IS : 3716-1978§.

6. STRUCTURES

6.0 The supporting structures may be of tubular steel, prestressed cement concrete (PCC), reinforced cement concrete (RCC), rail, lattice steel or wood poles for lattice type towers. The choice of the type of support is decided by topography and economical consideration and importance of the load served.

6.1 Pole — For detailed information on the design and choice of various types of poles, reference shall be made to IS : 5613 (Part 1/Sec 1)-1985‖.

6.2 Towers — The design and material of the towers shall conform to IS : 802 (Part 1)-1977¶, IS : 802 (Part 2)-1978** and IS : 802 (Part 3)-1978††.

---

*Specification for voltages and frequency for ac transmission and distribution systems (*revised*).

†Insulation co-ordination: Part 1 Phase-to-earth insulation co-ordination.

‡Insulation co-ordination: Part 2 Phase-to-phase insulation co-ordination principles and rules.

§Application guide for insulation co-ordination (*first revision*).

‖Code of practice for design, installation and maintenance of overhead power lines: Part 1 Lines up to and including 11 kV, Section 1 Design (*first revision*).

¶Code of practice for use of structural steel in overhead transmission line towers: Part 1 Loads and permissible stresses (*first revision*).

**Code of practice for use of structural steel in overhead transmission line towers: Part 2 Fabrication, galvanizing, inspection and packing.

††Code of practice for use of structural steel in overhead transmission line towers: Part 3 Testing.

6.3 In case of hot-dip galvanized structures galvanizing shall conform to IS : 2633-1972*, IS : 4759-1979† and IS : 1367 (Part 13)-1983‡. For spring washers, bolts and nuts of 12·7 mm diameter or below, electrogalvanizing in accordance with IS : 1573-1970§ shall be acceptable.

6.4 Choice of Spans — Besides others, the following factors influence the choice of span:

a) Ease of construction and cost of the line,

b) Ease of maintenance and maintenance cost of the line,

c) Terrain conditions, and

d) Availability and cost of relevant equipment.

6.4.1 The following span lengths may be considered for adoption:

Nominal System Voltage kV (rms)	*Number of Circuits*	*Span Range* m
33 (over poles)	1	90-135
33	1	180-305
	2	180-305
66	1	204-305
	2	240-320
110	1	305-335
	2	305-335
132	1	305-365
	2	305-380
220	1	320-380
	2	320-380

6.4.2 *Ruling (Equivalent) Span* — For erecting an overhead line all the spans cannot be kept equal because of the profile of the land and proper clearance considerations. If this was done then adjustments of tensions would be necessary in adjacent spans since any alteration in temperature and loading would result in unequal tension in the various spans. This is

*Methods of testing uniformity of coating on zinc coated articles (*first revision*).

†Specification for hot-dip zinc coatings on structural steel and other allied products (*first revision*).

‡Technical supply conditions for threaded steel fasteners; Part 13 Hot-dip galvanized coatings on threaded fasteners (*second revision*).

§Electroplated coatings for zinc on iron and steel (*first revision*).

obviously impracticable as a constant tension shall be applied at the tensioning position and this constant tension shall be uniform throughout the whole of the section. With suspension insulators the tension unequalities would be compensated by string deflections but for post or pin insulators these inequalities would have to be taken by the binders which is not desirable. Therefore, a constant tension is calculated which will be uniform throughout the section. For calculating this uniform tension an equivalent span for the whole section of the line is chosen. The ruling span is then calculated by the following formula:

$$L_R = \sqrt{\frac{L_1^3 + L_2^3 + L_3^3 + \ldots}{L_1 + L_2 + L_3}}$$

where

L_R = ruling span; and

$L_1, L_2, \ldots$, different spans in a section.

Having determined the ruling span and basic tension, the sag may be calculated by the following formula:

$$S = \left(\frac{\text{actual span}}{\text{ruling span}}\right)^2 \times S_R$$

where

S = sag for actual span, and

S_R = sag for ruling span.

NOTE 1 — For ready reference tensions may be calculated for different sizes of conductors for different span lengths and at different temperatures and plotting as sag tension charts.

NOTE 2 — For the limitation regarding weight span and wind span, reference shall be made to IS : 802 (Part 1)-1977* as well as Appendix A of IS : 5613 (Part 2/Sec 2)-1985†.

6.5 Recommended Structure Configuration — The typical pole configurations are in Fig. 1. Figures 2 and 3 illustrate typical configurations for towers having single and double circuits respectively. A typical example of overhead power line on double pole structure is given in Fig. 4.

*Code of practice for use of structural steel in overhead transmission line towers: Part 1 Loads and permissible stress (*second revision*).

†Code of practice for design, installation and maintenance of overhead power lines: Part 2 Lines above 11 kV and up to and including 220 kV, Section 2 Installation and maintenance (*first revision*).

6.6 Tower Loadings — In tower designs the following simultaneous external loadings should be considered.

6.6.1 *Normal Conditions*

a) *Transverse loads*:

1) wind on wires,
2) wind on insulators,
3) deviation on tower, and
4) wind on tower.

b) *Vertical loads*:

1) weight of wires (up or down);
2) weight of ice, if any;
3) weight of insulators; and
4) erection load.

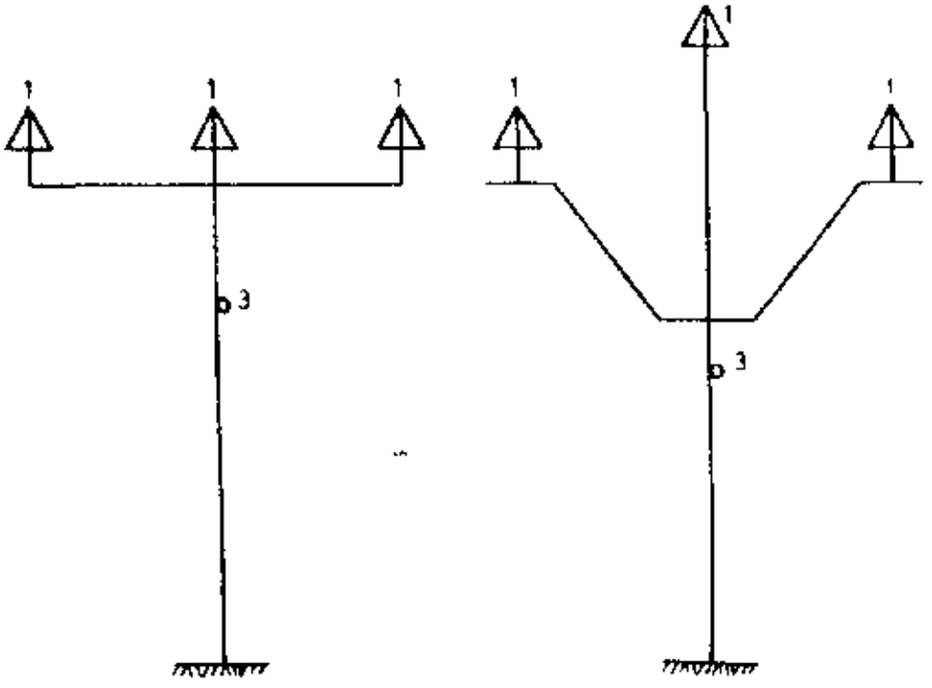

1A Shorter Poles but Increased Reactive Drop

1B Lighter Poles, Fewer Brid Faults

FIG. 1 TYPICAL CONFIGURATION OF CONDUCTORS OF OVERHEAD LINES ON POLES—*Contd.*

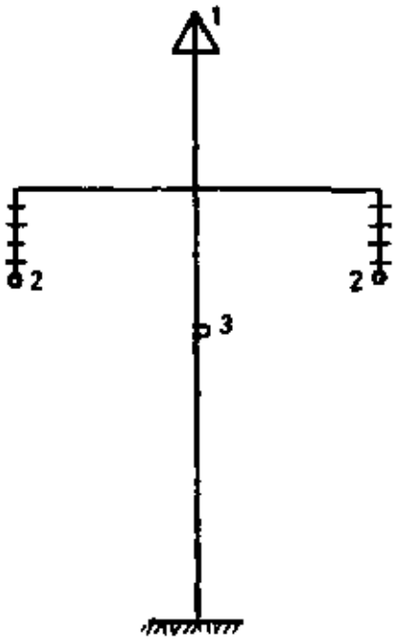

1C Alternative to Arrangement at B

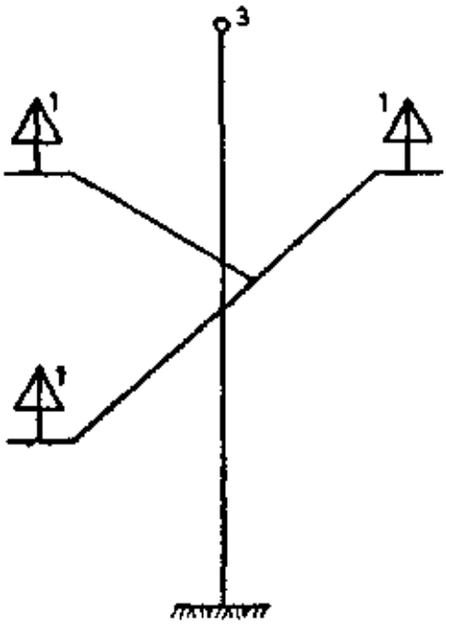

1D Suitable Where Earth Wire Need be Provided at Top

1 represents conductor, mounted on pin insulator
2 represents conductor, hung from suspension string
3 represents earth conductor, where needed

FIG. 1 TYPICAL CONFIGURATION OF CONDUCTORS OF OVERHEAD LINES ON POLES

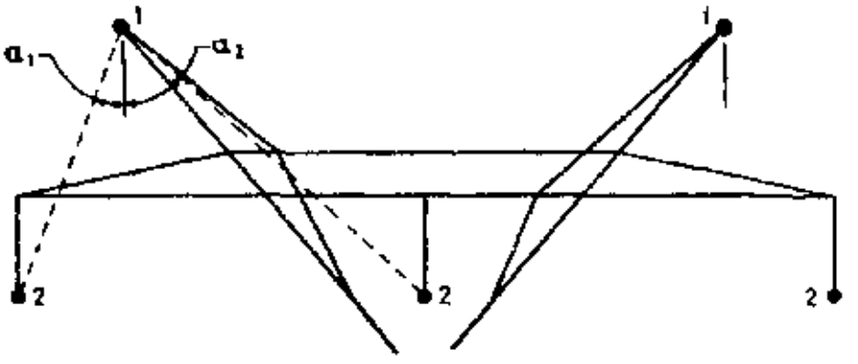

Suitable for snow bound areas - - better appearance and superior performance against lightning

2A Horizontal Formation (Two Earth Conductors)

FIG. 2 TYPICAL CONFIGURATION OF CONDUCTORS OF OVERHEAD LINES ON TOWERS (SINGLE CIRCUIT)—*Contd.*

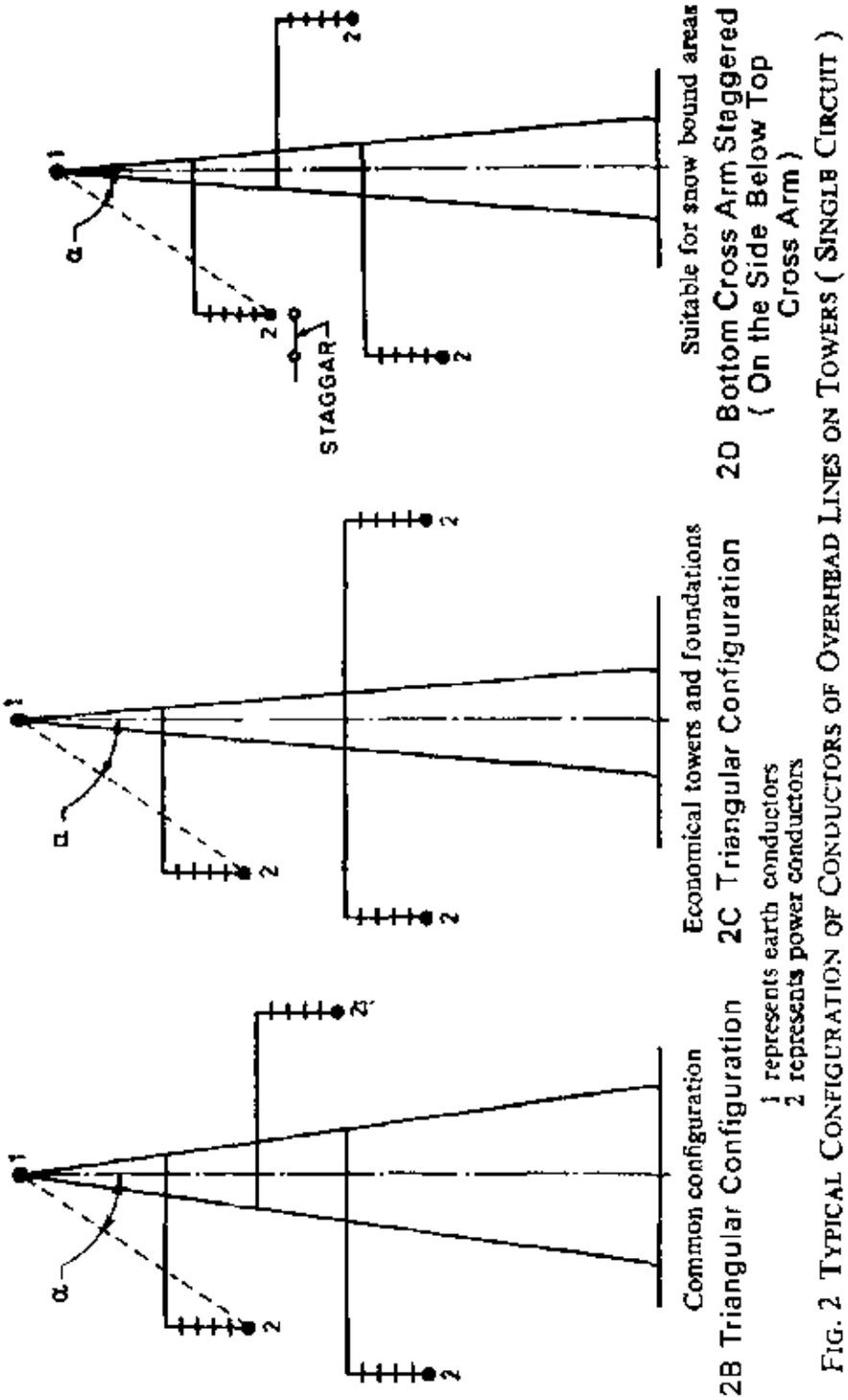

FIG. 2 TYPICAL CONFIGURATION OF CONDUCTORS OF OVERHEAD LINES ON TOWERS (SINGLE CIRCUIT)

NOTE 1 — *If there is no uplift on the wires as observed by applying the sag template in accordance with Appendix A of IS : 5613 (Part 2/Sec 2)-1985* the tension of the wires acts downwards. If there is uplift, the tension of the wires acts upwards and has to be taken as such for tower designs.*

NOTE 2 — The unit weight of ice shall be taken as 916·8 kg/m² at 0°C while calculating the ice loadings. The ice coating on supporting structures themselves may be ignored for design purposes.

c) *Longitudinal loads* — In case of dead ends; or in case of unequal tensions on either side (if known).

6.6.2 *Broken Wire Condition*

a) As in **6.6.1**(a) and (b) above, modified for broken wire effect; and

b) Longitudinal loads.

6.7 Tower Accessories

6.7.1 *Number Plates* — These shall conform to Fig. 5.

6.7.2 *Danger Notice Plates* — These shall conform to IS : 2551-1983†.

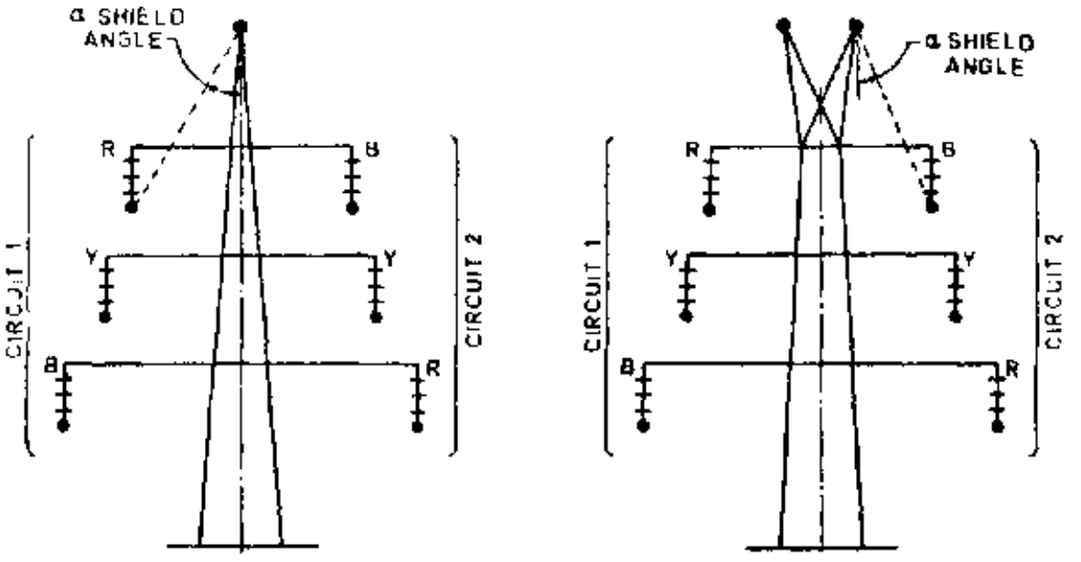

Common configuration

3A Vertical Formation Single Earth Conductor

Superior performance against lightning

3B Vertical Formation Two Earth Conductors

FIG. 3 TYPICAL CONFIGURATION OF CONDUCTORS OF OVERHEAD LINES ON TOWERS (DOUBLE CIRCUIT)— *Contd.*

*Code of practice for design, installation and maintenance of overhead power lines; Part 2 Lines above 11 kV and up to and including 220 kV, Section 2 Installation and maintenance (*first revision*).

†Danger notice plates (*first revision*).

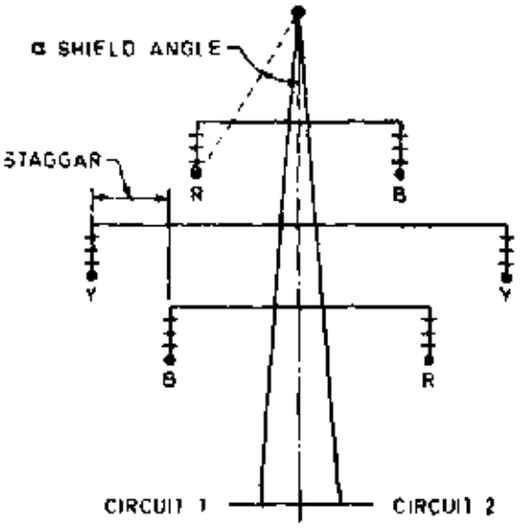

Suitable for snow bound areas

3C Vertical Formation With Middle Cross-arm Staggered

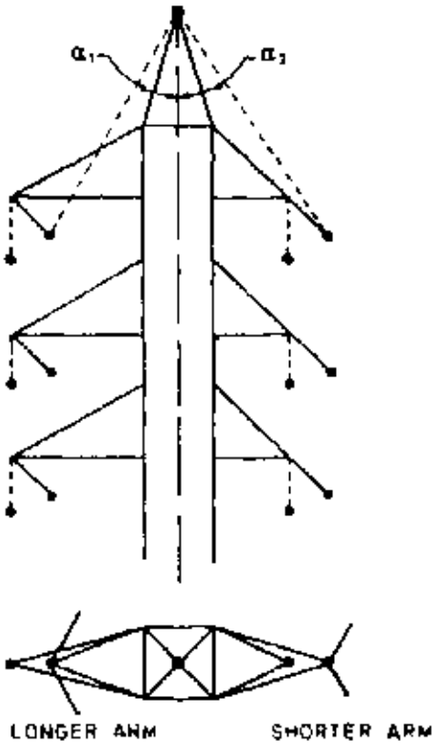

Economical tower and foundations

3D Configuration with Dis-similar Cross Arm for 0·5° Suspension and Various Tension Locations

FIG. 3 TYPICAL CONFIGURATION OF CONDUCTORS OF OVERHEAD LINES ON TOWERS (DOUBLE CIRCUIT)

6.7.3 *Phase Plates* — These shall be in sets of red, yellow and blue colours and conform to Fig. 6.

6.7.4 *Circuit Plates* — These shall conform to Fig. 7. This may be combined with phase plate referred in **6.7.3**.

6.7.5 *Anticlimbing Device* — These shall conform to the specifications laid down by the user of the installation. A typical example of providing anti-climbing device is given in Fig. 8.

6.7.6 *Step Bolts* — The step bolt shall be provided on leg No. 1 (*see* Fig. 9) of the tower starting from 2·5 m above the ground level and spaced at a maximum distance of 450 mm centre-to-centre up to the top of the tower. In case of double circuit lines for the sake of convenience

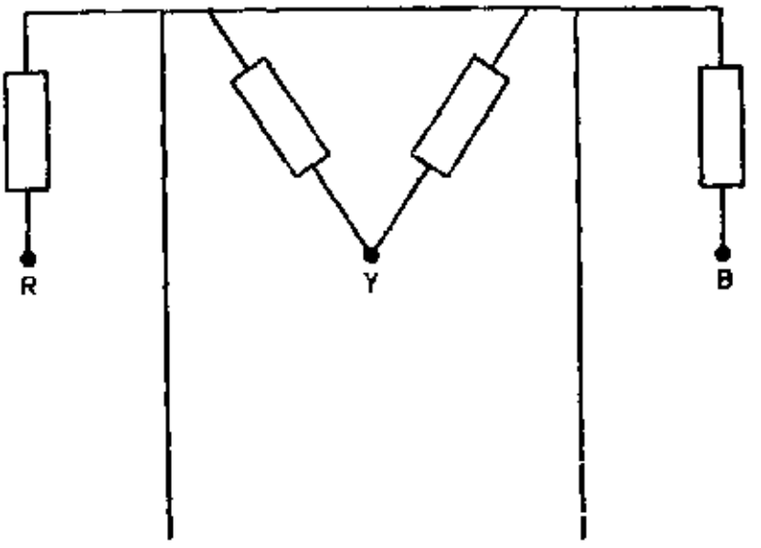

FIG. 4 TYPICAL LINE ON DOUBLE POLE STRUCTURE

of maintenance, the user may specify the provisions of step bolt on diagonally opposite legs (that is, leg No. 1 and 3 in Fig. 9). The step bolt shall not be less than 16 mm diameter and length of 150 mm. The step bolt shall have hexagonal head.

6.7.7 Arrangements shall be provided for fixing the accessories (covered in 6.7.1 to 6.7.5) to the power at a height between 2·5 and 3·5 m above ground level.

6.7.8 *Bird Guards* — These shall be of saw tooth type and shall be fixed over the suspension insulator strings (*see* Fig. 10).

6.8 Tower Foundations

6.8.1 The design of foundation for transmission line towers shall conform to IS : 4091-1979*.

NOTE — For wet locations, allowance for eventual sub-soil water level rise which shall be more during rainy season when worst loadings may also be experienced shall be made in the design of foundations. For classification of soil, *see* 8 of IS : 5613 (Part 2/Sec 2)-1985†.

*Code of practice for design and construction of foundations for transmission line towers and poles (*first revision*).

†Code of practice for design, installation and maintenance of overhead power lines: Part 2 Lines above 11 kV and up to and including 220 kV, Section 2 Installation and maintenance (*first revision*).

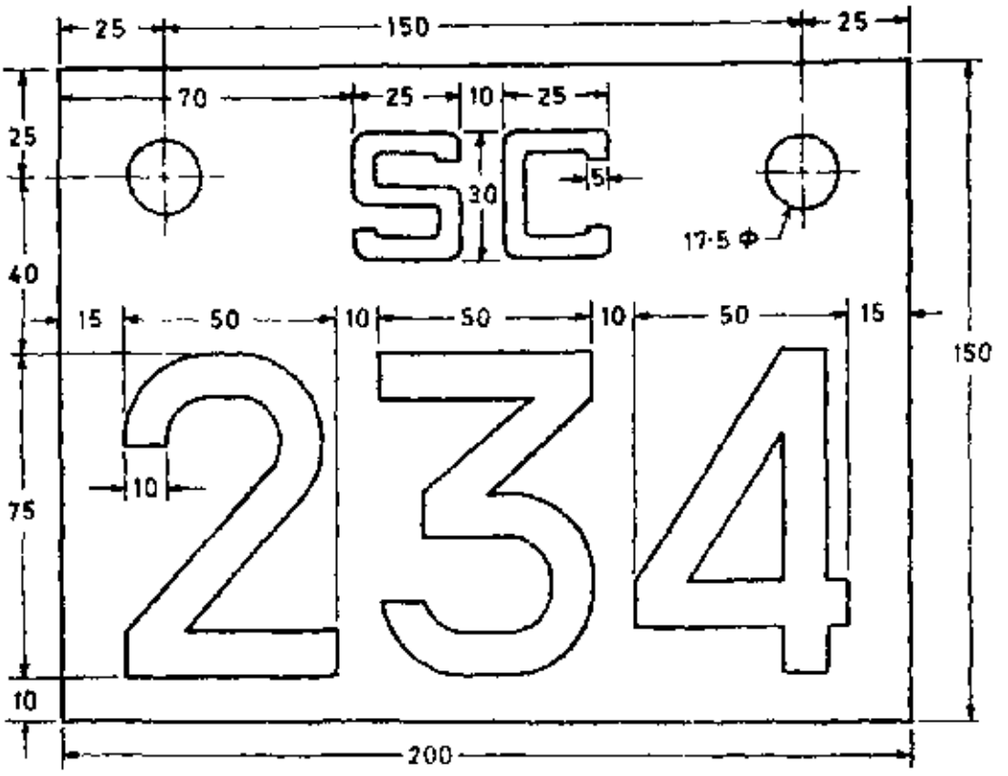

NOTE 1 — Lettering should be in red enamelled on white background.

NOTE 2 — The rear side of the plate shall be enamelled black.

NOTE 3 — The plate shall be of minimum 1·6 mm thick mild steel sheet.

NOTE 4 — For number plate, numbering shall be in sequence of tower numbers as per specification.

NOTE 5 — 'SC' represents first letter of starting and ending place of line respectively.

All dimensions in millimetres.

FIG. 5 NUMBER PLATE

6.9 Bolt and Nuts — Bolts and nuts shall conform to IS : 6639-1972*. The mechanical properties shall conform to property class 4·6 and class 4 of IS : 1367-1967† for bolts and nuts respectively.

*Specification for hexagon bolts for steel structures.

†Technical supply conditions for threaded fasteners (*first revision*).

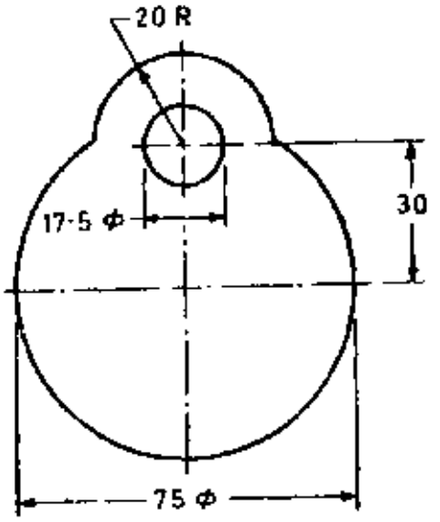

NOTE 1 — One set consisting of 3 plates having red, blue and yellow colours shall be required for single circuit line.

NOTE 2 — Two sets each consisting of 3 plates having red, blue and yellow colours shall be required for double circuit line.

NOTE 3 — The plate shall be of minimum 1·6 mm thick mild steel sheet. Front and back of the plate shall be enamelled : Front with colours as per Notes 1 and 2 and back enamelled black.

All dimensions in millimettres.

FIG. 6 PHASE PLATE

6.9.1 *Washers* — Washers shall conform to IS : 2016-1967*. Heavy washers shall conform to IS : 6610-1972†. Spring washers shall conform to type B of IS : 3063-1972‡.

6.9.2 *Galvanizing* — Bolts and other fasteners shall be galvanized in accordance with IS : 1367 (Part 13)-1983§ galvanizing of the members of the tower shall conform to IS : 4759 1979‖ and spring washers shall be galvanized in accordance with IS : 1573-1970¶.

---

*Specification for plain washers (*first revision*).

†Specification for heavy washers for steel structures.

‡Specification for single coil, rectangular section spring washers for bolts, nuts and screws (*first revision*).

§Technical supply conditions for threaded steel fasteners : Part 13 Hot-dip galvanized coatings on fasteners (*second revision*).

‖Specification for hot-dip zinc coatings on structural steel and other allied products (*first revision*).

¶Specification for electroplated coatings for zinc on iron and steel (*first revision*).

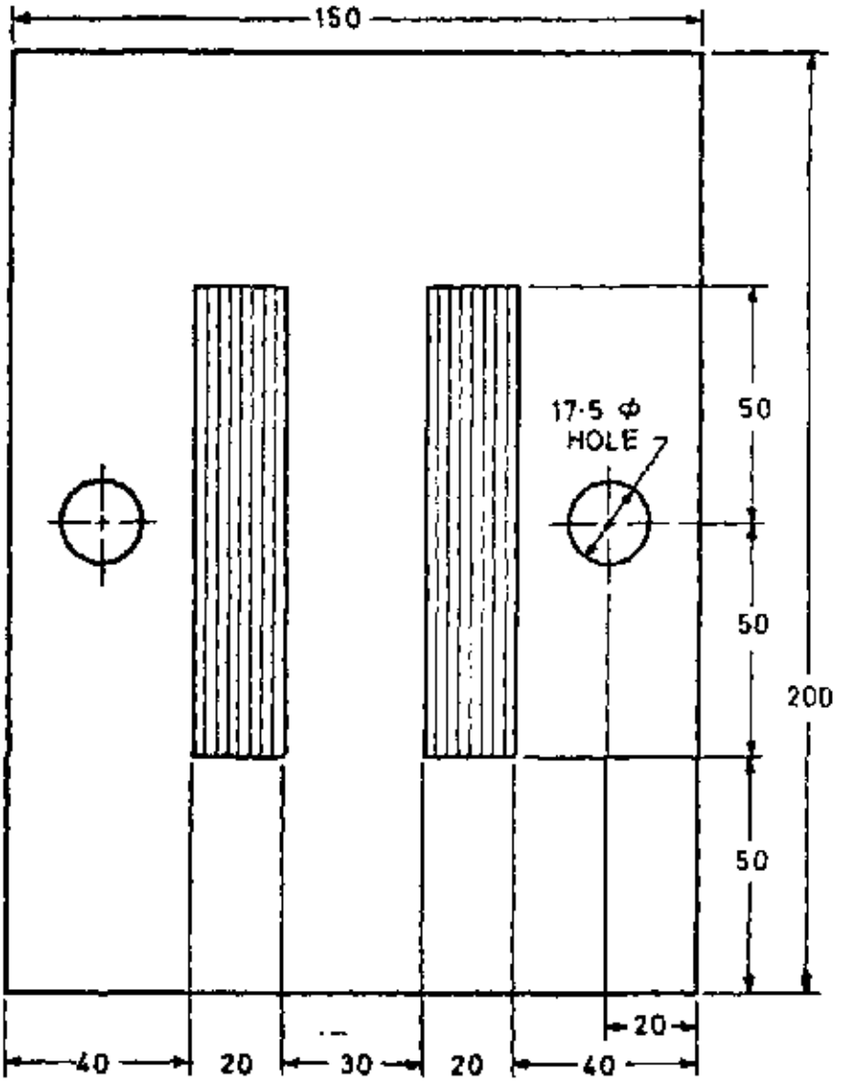

NOTE 1 — Lettering should be in red enamelled on white background.

NOTE 2 — Rear side of the plate shall be enamelled black.

NOTE 3 — One set consists of 2 such plates with markings 'I' and 'II' for double circuit tower only.

NOTE 4 — The material of the plate shall be of mild steel having minimum thickness 1·6 mm.

All dimensions in millimetres.

FIG. 7 CIRCUIT PLATE

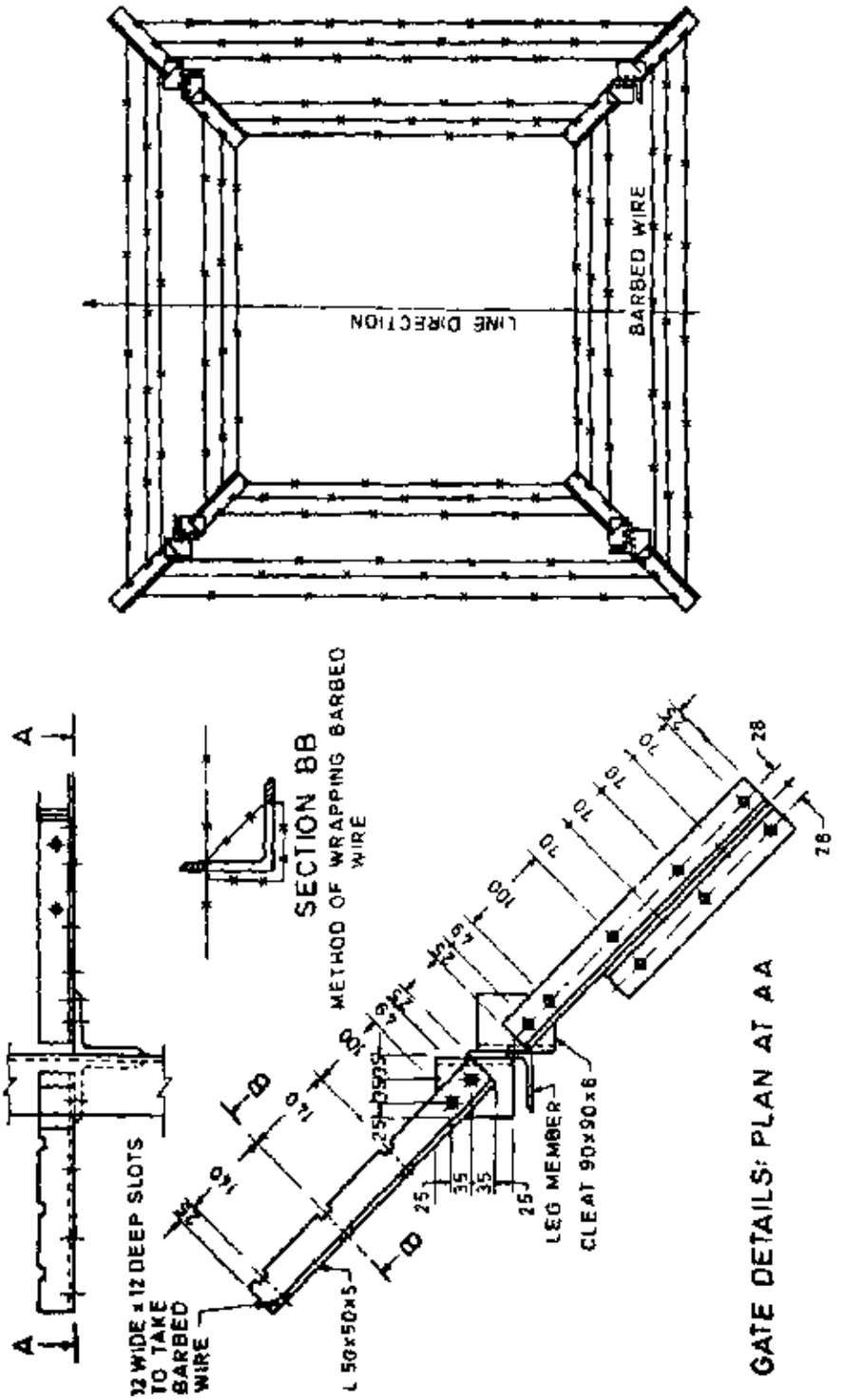

NOTE 1 — All holes are 17·5 mm diameter to suit 16 mm diameter bolts.
NOTE 2 — Blank holes at gate are to receive barbed wire.
NOTE 3 — One 3-mm spring washer to be provided under each nut.

All dimensions in millimetres.

FIG. 8 DETAIL OF ANTICLIMBING DEVICE

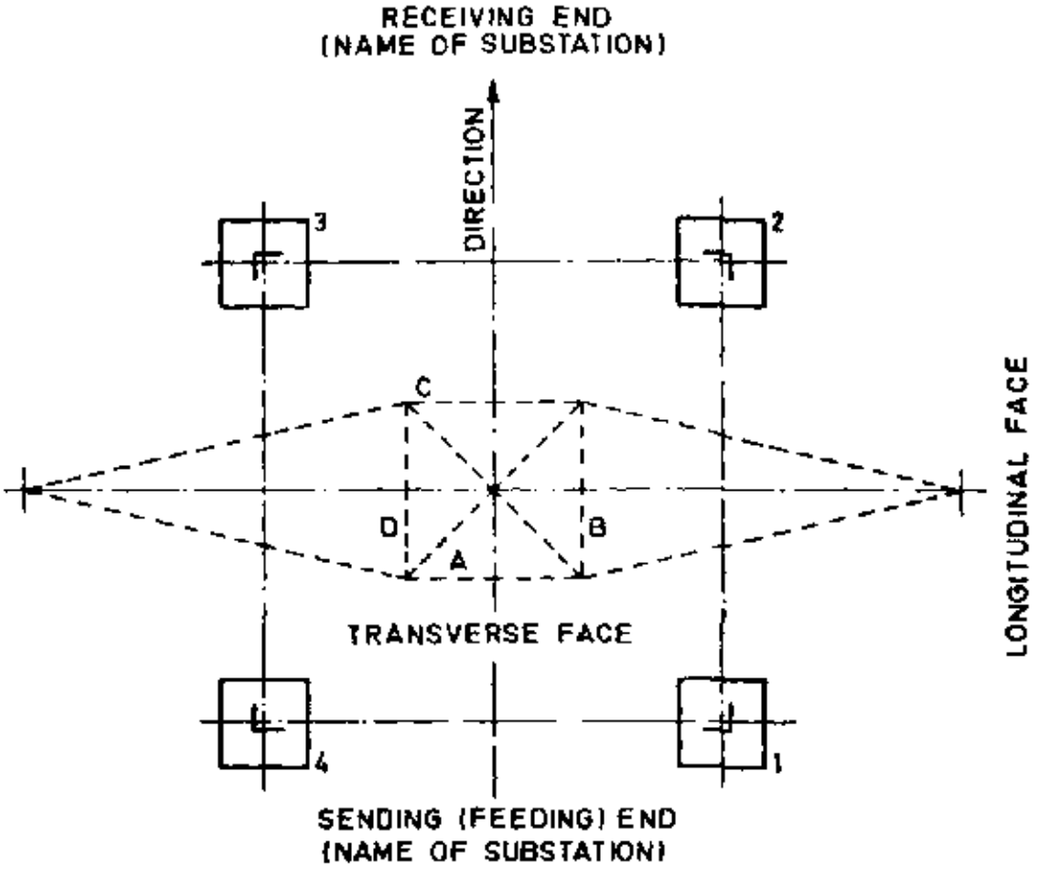

1 represents leg or pit No. 1

2 represents leg or pit No. 2

3 represents leg or pit No. 3

4 represents leg or pit No. 4

A represents near side (NS) transverse face

B represents near side (NS) longitudinal face

C represents far side (FS) transverse face

D represents far side (FS) longitudinal face

NOTE 1 — Danger and number plates are located on Face 'A'.

NOTE 2 — Leg 1 represents the leg with step bolts and anti-climb device gate if any. If two legs with step bolts are required, the next is No. 3 leg.

FIG. 9 DESIGNATION OF TOWER LEGS, FOOTINGS AND FACES

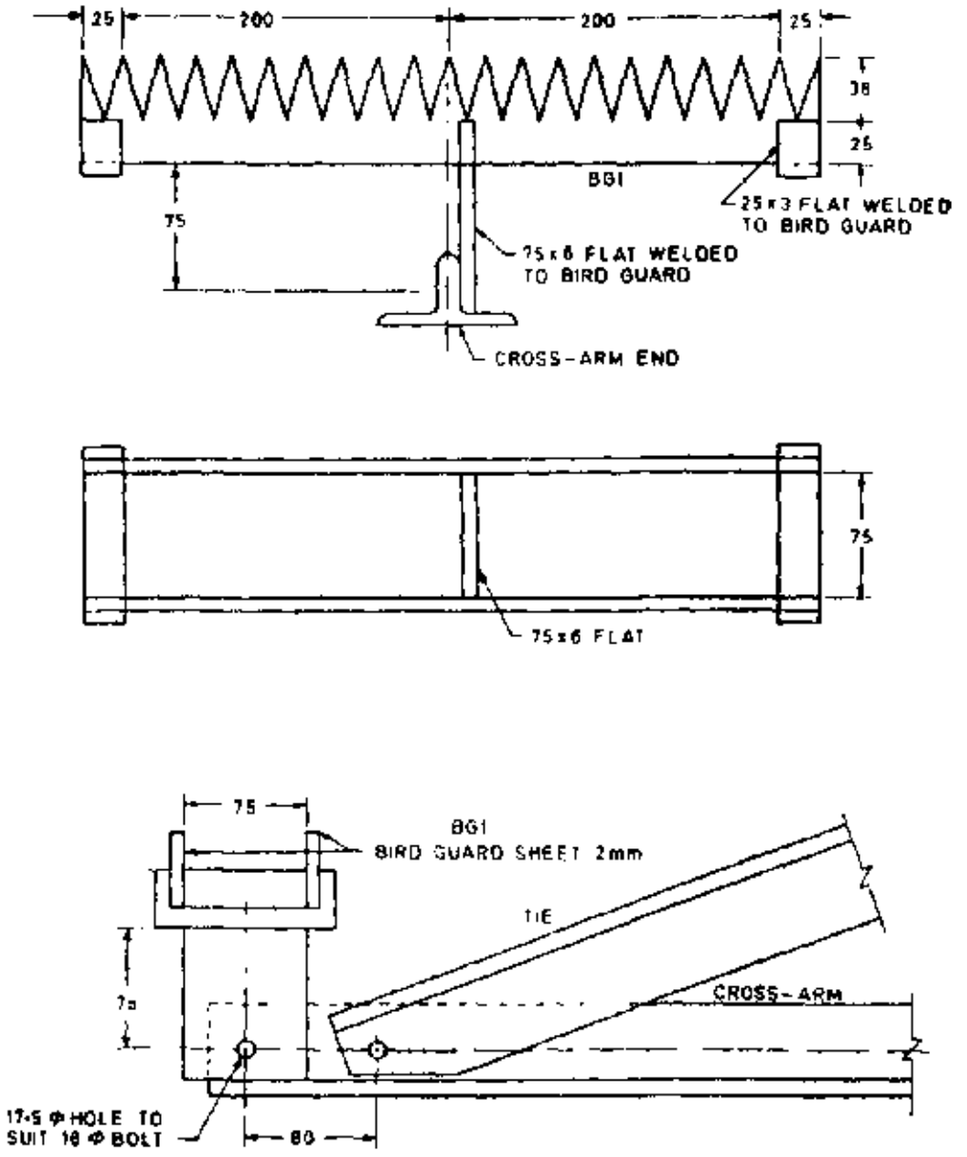

NOTE — All parts to be galvanized.

All dimensions in millimetres.

FIG. 10 BIRD GUARD

7. POWER CONDUCTORS AND ACCESSORIES

7.1 It is now almost invariable practice to use aluminium conductors for overhead lines. Hard-drawn stranded aluminium and steel-cored aluminium and aluminium alloy conductors shall conform to the provisions of appropriate parts of IS : 398-1976* and their packing to IS : 1778-1980†.

NOTE 1 — For the same copper equivalent area of conductor if two sizes are specified in IS : 398-1976*, choice of the size would depend upon the consideration of flexibility and the resultant effect on the cost of the tower.

NOTE 2 - Due to the shortage of zinc in the country attention is drawn to the use of aluminized steel reinforced aluminium conductors and aluminium alloy stranded conductors. Requirements for these types of conductors have also been covered in the appropriate parts of IS : 398 (Parts 1 to 4)*.

7.2 The accessories shall conform to the provision of IS : 2121 (Part 1)-1981‡ and IS : 2121 (Part 2)-1981‡. In order to damp the aeolian vibration on conductors, wherever necessary vibration dampers shall be fitted on the overhead lines (*see* IS : 9708-1980§). Suitable spacers and spacer dampers shall be used where more than one subconductor per phase is there in order to maintain uniform spacing between the subconductors under normal operating service conditions (*see* IS : 10162-1982‖).

NOTE -- Attention is drawn to the use of helically formed fitting for overhead lines for dead ending, connections, jointing, splicing, insulator tieing, etc. An Indian Standard on helically formed fittings for overhead lines is under preparation.

7.3 Line Configuration and Conductor Spacings

7.3.1 Typical conductor configurations are given in Fig. 1 to 4.

7.3.2 The conductor spacings are influenced by the rated voltage of the line, required minimum mid-span clearance, insulator string length, cross-arm adopted for the supporting structures, amount and type of loadings,

*Specification for aluminium conductors for overhead transmission purposes:
Part 1 Aluminium stranded conductors (*second revision*).
Part 2 Aluminium conductors galvanized steel reinforced (*second revision*).
Part 3 Aluminium conductors, aluminized steel reinforced (*second revision*).
Part 4 Aluminium alloy stranded conductors (aluminium-magnesium-silicon type) (*second revision*).

†Specification for reels and drums for bare conductors (*first revision*).

‡Specification for conductors and earth wires accessories for overhead power lines:
Part 1 Armour rods, binding wires and tapes (*first revision*).
Part 2 Mid-span joints and repair sleeves for conductors (*first revision*).

§Specification for stockbridge vibration dampers for overhead power lines.

‖Specification for spacer and spacers dampers for twin horizontal bundle conductors.

etc. The following values are representative of minimum spacings adopted currently:

Line kV	*No. of Circuits*	*Minimum Electrical Clearance Between Conductors, Metres*	
		Vertical	Horizontal
33	1 (on poles)	1·5	1·5
33	1 or 2	1·5	1·5
66	1 or 2	2·0	3·5
110	1 or 2	3·2	5·5
132	1 or 2	3·9	6·8
220	1 (horizontal formation)	—	6·0
220	1 or 2	4·9	8·4

NOTE — The standard empirical formula for determining conductor spacing is under consideration.

7.3.2.1 The values of minimum electrical clearances given in **7.3.2** do not take into account the effect of galloping or dancing of conductors. The galloping or dancing of conductors may be caused because of the following:

a) When a flock of birds perching together on a conductor suddenly takes off, leaving the conductor jumping in loops;

b) When ice on a portion of an ice-covered conductor melts and suddenly drops off; and

c) Under light drift wind conditions on ice covered conductor in valley.

7.3.2.2 There is no mechanical device available at present for effectively damping a galloping or dancing conductor. In any case, it is necessary that the conductors do not contact each other and for this purpose arrangements given below may be resorted to:

a) *Single circuit lines*

1) The conductors shall preferably be placed in horizontal formation on 'H-type' or 'Corset' type structures.

2) In case triangular formation has to be adopted, the conductor lying below an upper one shall be staggered out by a distance of

$$X = \frac{V}{150}$$

where

X = staggered distance, in metres; and

V = system voltage in kilovolts.

b) *Double circuit lines*

In case of double circuit lines in vertical formation, the middle conductors shall be starred out from top and bottom conductors by a distance as obtained by the formula given in 7.3.2.2(a)(2).

7.4 Reference shall be made to 6 of IS : 5613 (Part 1/Sec 1)-1985* for design details of conductors.

8. EARTH CONDUCTORS AND ACCESSORIES

8.1 Normally galvanized steel earth conductors conforming to IS : 2141-1968† shall be used but where the atmosphere is corrosive or the resistance of the earth path is required to be lower or both, ACSR conductors conforming to appropriate parts of IS : 398 (Parts 1 to 4)‡ may be used.

8.2 The earth conductor is placed on top of the structure to provide a shield angle over the top power conductors, the recommended angle being 30° with the vertical in case of vertical formation of power conductors. With horizontal formation of power conductors the shield angle is usually maintained at 25° for outer conductors, and 45° for the central one.

NOTE — Locations where isokeraunic levels are high, lower angle of shielding than specified in 8.2 may be necessary.

8.2.1 In case of lines of 33 kV and below, shielding by means of earth conductor is normally not considered necessary. To provide the continuous earthing, the practice is to provide one earth conductor underneath the power conductors.

*Code of practice for design, installation and maintenance of overhead power lines: Part 1 Lines up to and including 11 kV, Section 1 Design (*first revision*).

†Galvanized stay strand (*first revision*).

‡Specification for aluminium conductors for overhead transmission purposes:

Part 1 Aluminium stranded conductors (*second revision*).

Part 2 Aluminium conductors, galvanized steel reinforced (*second revision*).

Part 3 Aluminium conductors, aluminized steel reinforced (*second revision*).

Part 4 Aluminium alloy stranded conductors (aluminium magnesium silicon type) (*second revision*).

8.3 For other requirements, reference shall be made to IS : 3043-1966*.

9. EARTHING

9.1 All metal supports and all reinforced and prestressed cement concrete supports of overhead lines and metallic fittings attached thereto, shall be permanently and efficiently earthed. For this purpose a continuous earth wire shall be provided and securely fastened to each pole and connected with earth ordinarily at 3 points in every kilometre, the spacing between the points being as nearly equidistant as possible. Alternatively, each support and metallic fittings attached thereto shall be efficiently earthed.

9.2 Each stay-wire shall be similarly earthed unless an insulator has been placed in it at a height not less than 3 0 metres from the ground.

9.3 Earthing in each case shall conform to IS : 3043-1966*.

10. MAXIMUM WORKING TENSION FOR CONDUCTORS

10.1 Maximum working tension for conductors shall be limited in accordance with the provisions of the Indian Electricity Rules and IS : 802 (Part 1)-1977†. These working tensions shall not be exceeded if the actual ruling spans exceed the design span for which the maximum working tensions are calculated and used in the design of towers. In all such cases appropriate allowances on sags shall be made so that the tensions are not exceeded. The actual span shall not vary more than the limits of the design tower capacity.

10.2 For any difference between the conductor tension in adjacent line sections, the relevant section tower shall be checked for its capacity to withstand the resulting unbalanced longitudinal loads together with the other existing loadings according to design specifications and the position of the tower.

10.3 The still air earth conductor sag shall not exceed the power conductor sag within the specified range of temperature so as to ensure that the minimum shield angle is maintained and the minimum specified mid-span clearance is not encroached upon [*see also* **13.2**(b)].

*Code of parctice for earthing.

†Code of practice for use of structural steel in overhead transmission line towers: Part 1 Loads and permissible stress (*first revision*).

10.4 For long spans (where sag exceeds 4 percent of the span length) and spans with steep slopes, the tension at supports exceeds the horizontal conductor tension obtained by the usual sag-tension calculations. In case this increase is in excess of 5 percent of the maximum working tension, the specified safety factors for sag-tension calculations shall be suitably increased.

10.5 For general theory of sag and tension calculation, reference shall be made to 7 of IS : 5613 (Part 1/Sec 1)-1985* and an example of sag and tension calculations for ACSR conductors is given in Appendix A.

11. INSULATORS AND FITTINGS

11.1 Porcelain insulators shall conform to the provisions of IS : 731-1971† and IS : 3188-1965‡. The number and size of discs should be decided in consultation with the manufacturer in such a manner that assembled insulators conform to the insulation levels specified in IS : 731-1971†.

11.2 Insulator fittings shall conform to the provision of IS : 2486 (Part 1)-1971§ IS : 2486 (Part 2)-1974§ and IS : 2486 (Part 3)-1974§.

11.3 Breaking strength of the insulator string assembly shall be as follows:

a) *Suspension String* — Not less than 50 percent of the ultimate strength of the conductor specified in appropriate part in IS : 398 (Parts 1 to 4)‖.

b) *Tension String* — Not less than 95 percent of the ultimate strength of the conductor specified in appropriate part in IS : 398 (Parts 1 to 4)‖.

---

*Code of practice for design, installation and maintenance of overhead power lines: Part 1 Lines up to and including 11 kV, Section 1 Design (*first revision*).

†Specification for porcelain insulators for overhead power lines with a nominal voltage greater than 1 000 V (*second revision*).

‡Dimensions for disc insulators.

§Specification for insulator fittings for overhead power lines with a nominal voltage greater than 1 000 V:

Part 1 General requirements and tests (*first revision*).

Part 2 Dimensional requirements.

Part 3 Locking devices.

‖Specification for aluminium conductors for overhead transmission purposes:

Part 1 Aluminium stranded conductors (*second revision*).

Part 2 Aluminium conductors, galvanized steel reinforced (*second revision*).

Part 3 Aluminium conductors, aluminized steel reinforced (*second revision*).

Part 4 Aluminium alloy stranded conductors (aluminium magnesium silicon type) (*second revision*).

12. FOUNDATIONS

12.1 The foundation designs shall conform to IS : 456-1978* and IS : 4091-1979†.

13. CLEARANCES

13.1 The minimum clearances shall be in accordance with Indian Electricity Rules, 1956 and are given in Table 1.

TABLE 1 MINIMUM CLEARANCES

Voltage Category (IE Rules, 1956)	High Voltage		Extra High Voltage			
Nominal System Voltage	22 kV	33 kV	66 kV	110 kV	132 kV	220 kV
Clearance	Minimum Value in Metres					
i) *Clearance to Ground*						
a) Across street	6·1	6·1	6·1	6·1	6·1	7·0
b) Along street	5·8	5·8	6·1	6·1	6·1	7·0
c) Other areas	5·2	5·2	5·5	6·1	6·1	7·0
ii) *Clearance to Buildings*						
a) Vertical* — from highest object	3·66	3·66	3·97	4·58	4·58	5·49
b) Horizontal† — from nearest point	1·83	1·83	2·14	2·75	2·75	3·66
iii) *At Crossings with*						
a) Tramway/trolley bus	2·44	2·44	3·05	3·05	3·05	3·51
b) Telecom lines	—	—	2·44	2·75	2·75	3·05
c) *Railways*‡						
1) Category A section electrified on 1 500 Vdc) — Broad, metre and narrow gauge:						
Inside station limits	13·28	13·28	13·59	14·20	14·20	15·11
Outside station	11·28	11·28	11·59	12·20	12·20	13·11
2) Category B (section already electrified or likely to be converted to or electrified on 25 kV ac system within the foreseable future) — Broad, gauge, metre and narrow gauges:						
Inside station limits	15·28	15·28	15·59	16·20	16·20	18·63
Outside station limits	13·28	13·28	13·59	14·20	14·20	15·11

(*Continued*)

*Code of practice for plain and reinforced concrete (*third revision*).

†Code of practice for design and construction of foundations for transmission line powers and poles (*first revision*).

TABLE 1 MINIMUM CLEARANCES — *Contd*

Voltage Category (IE Rules, 1956)	High Voltage		Extra High Voltage			
Nominal System Voltage	22 kV	33 kV	66 kV	110 kV	132 kV	22 kV
Clearance	Minimum Value in Metres					
3) Category C (section not likely to be electrified in the foreseable future) — Broad gauge						
Inside station limits	10·06	10·06	10·36	10·97	10·97	11·89
Outside station limits	7·62	7·62	7·92	8·53	8·53	9·45
Metre gauge and narrow gauge:						
Inside station limits	8·94	8·94	9·15	9·76	9·76	10·67
Outside station limits	6·40	6·40	6·71	7·32	7·32	8·23
iv) *Between Lines when Crossing Each Other (Derived)*						
250 V	2·44	2·44	2·44	2·75	3.05	4·58
650 V	2·44	2·44	2·44	2·75	3·05	4·58
11 kV	2·44	2·44	2·44	2·75	3·05	4·58
22 kV	2·44	2·44	2·44	2·75	3·05	4·58
33 kV	2·44	2.44	2·44	2·75	3·05	4·58
66 kV	2·44	2·44	2·44	2·75	3·05	4·58
110 kV	2·75	2·75	2·75	2·75	3·05	4·58
132 kV	3·05	3·05	3·05	3·05	3·05	4·58
220 kV	4·58	4·58	4·58	4·58	4·58	4·58

NOTE 1 — For all crossings, the clearance to be obtained at the worst conditions of proximity of wires.

NOTE 2 — The above table has been compiled with the help of Indian Electricity Rules, 1956.

*Vertical clearance to be obtained at maximum still air final sags (at maximum temperature, or ice-loaded conductor at 0°C).

†Horizontal clearance to be obtained at worst load conditions with maximum deflected conductor position, including that of insulator string, if any.

‡Category A: tracks electrified on 1 500 V dc system.

Category B: tracks already electrified or likely to be converted to or electrified on 25 kV system within the foreseable future.

Category C: tracks not likely to be electrified in the foreseable future. [For categories A and B crossings up to 650 V shall be by means of underground (U.G.) cables: while it is recommended that U.G. cable be used up to 11 kV. For Category C, it is recommended that U.G. cable be used up to 650 V. Above these, U.G. cable or overhead crossings may be adopted as preferred by the owner. The minimum clearance between any of the owner's conductors or guard wires and the Railway's conductors shall not be less than 2 m].

Station area means all tracks laying in the area between the outermost signals of a railway station.

13.2 Mid-span Clearance Between Earth Wire and Power Conductor — The following values may be considered subject to the conditions given below:

a) These should also meet the requirements of angle of shielding.

b) The earth wire sag shall be not more than 90 percent of the corresponding sag of power conductor under still air conditions for the entire specified temperature range:

Line Voltage kV	*Minimum Mid-span Clearance* m
33	1·5
66	3·0
110	4·5
132	6·1
220	8·5

NOTE - The mid-span clearance shall be reckoned as direct distance between earth wire and top power conductor, in case of vertical or triangular formation of conductors, or outer power conductors, in case of horizontal formation of conductors, at minimum temperature and still air conditions.

13.3 Live Metal Clearance — The live metal clearance depends upon the voltage of the conductors in different operating conditions. The values of these clearances corresponding to conditions normally considered for the design of lines are given in Table 2.

TABLE 2 MINIMUM ELECTRICAL CLEARANCES FROM LIVE CONDUCTOR TO EARTHED METAL PARTS

TYPE OF INSULATOR STRING	SWING IN DEGREE	MINIMUM ELECTRICAL CLEARANCE FOR LINE VOLTAGE				
		33 kV	66 kV	110 kV	132 kV	220 kV
(1)	(2)	(3) mm	(4) mm	(5) mm	(6) mm	(7) mm
i) Pin insulator	Nil	330	—	—	--	—
ii) Tension string (single/double)	Nil	330	915	1 220	1 530	2 130
iii) Jumper	Nil	330	915	1 220	1 530	2 130
	10°	330	915	1 220	1 530	2 130
	20°	330	610	915	1 070	1 675
	30°	330	610	915	1 070	—
iv) Single suspension string	Nil	330	915	1 220	1 530	2 130
	15°	330	915	1 220	1 530	1 980
	30°	330	760	1 070	1 370	1 830
	45°	330	610	915	1 220	1 675
	60°	330	610	915	1 070	—
v) Double suspension string	Nil	330	915	1 220	1 530	2 130

NOTE — The effect of galloping or dancing of conductors have not been taken into consideration while specifying the minimum electrical clearances.

13.3.1 The values given in Table 2 are considered to be suitable for elevations up to 1 000 m above the mean sea level (MSL). For heights over 1 000 m and up to 3 000 m above MSL, it is recommended that the values should be increased by 1·25 percent for every 100 m height or part thereof.

APPENDIX A

(*Clause* 10.5)

CALCULATIONS OF SAG AND TENSION

A-1. GENERAL

A-1.1 An example of sag and tension calculation for a conductor of following physical properties is given in **A-2.**

A-1.1.1 *Properties of Conductor*:

Conductor material	ACSR
Conductor size	30/7/3·00 mm
Overall diameter of the conductor (d)	= 21 mm
Area of the conductor (for all strands) (A)	= 2·6 155 cm²
Weight of the conductor (W)	= 0·973 kg/m
Breaking strength of the conductor (UTS)	= 9 130 kg
Coefficient of linear expansion (α)	= 17·73 × 10^{-6} per°C
Modulus of elasticity (E):	
Final (E I)	= 0·787 × 10^6 kgf/cm²
Initial (E I)	= 0·626 × 10^6 kgf/cm²

A-1.2 Data

Span (l)	= 305 m
Temperature	
Minimum	= — 18°C
Everyday (T)	= + 32°C
Maximum (T *Max*)	= + 55°C
Wind pressure at minimum temperature (P)	= 1·0 × 40 kg/m²
Limiting tension:	
Worst load	= 50 percent UTS

Everyday temperature, no load, final	= 25 percent UTS
Everyday temperature, no load, initial	= 35 percent UTS
Ice load	= 12·7 mm radial thickness at the rate of 916·8 kg/m³

A-2. CALCULATIONS

A-2.1 Parameters

Diameter with ice	= 46·40 mm
Weight with ice	= 2·206 kg/m
Wind, with ice	= p × d/1 000
	= 1·856 kg/m

$$\delta = W/A = 0{\cdot}973/2{\cdot}6\,155 = 0{\cdot}372 \text{ kg/m/cm}^2$$

Loading factors $q_1 = \dfrac{\sqrt{(2{\cdot}206)^2 + (1{\cdot}856)^2}}{0{\cdot}973} = 2{\cdot}963$ (ice and wind)

$$q_2 = 2{\cdot}206/0{\cdot}973 = 2{\cdot}267 \text{ (ice only)}$$

A-2.2 Formula — Tension is determined by the formula:

$$T_2^2 [\, T_2 - (K_1 - \propto t\lambda)] = \frac{l^2 W^2 q_2^2 \lambda}{24}$$

where

T_2 = tension in conductor at t_2°C

t = different of temperature between two sets of loading conditions = ($t_2 - t_1$)

$$K_1 = T_1 - \frac{l^2 W^2 q_1^2 \lambda}{24 T_1^2} \text{ and}$$

$$\lambda = E \times A$$

Dividing the expression by A and introducing the notation f for stress, we have

$$f_2^2 [\, f_2 - (K - \propto tE)] = \frac{l^2 \delta^2 q_2^2 E}{24} = Z_2 \text{ (say)}$$

where $K = f_1 - \dfrac{l^2 \delta^2 q_1^2 E}{24 f_1^2} \propto tE$ (− 18°C) = 0

A-2.3 Factors — $\alpha t E_0 = 17{\cdot}73 \times 10^{-6} \times 18 \times 0{\cdot}787 \times 10^6 = 251$

$\alpha t E_{32} = 17{\cdot}73 \times 10^{-6} \times 50 \times 0{\cdot}787 \times 10^6 = 698$

$\alpha t E_{55} = 17{\cdot}73 \times 10^{-6} \times 73 \times 0{\cdot}787 \times 10^6 = 1\,019$ (Final)

Z (final) $= 305^2 \times 0{\cdot}372^2 \times 0{\cdot}787 \times 10^6/24 = 4{\cdot}221\,3 \times 10^8$

Z_1 (final) $= 305^2 \times 0{\cdot}372^2 \times 0{\cdot}787 \times 10^6 \times 2{\cdot}963^2/24 = 37{\cdot}061 \times 10^8$

Z_2 (final) $= 305^2 \times 0{\cdot}372^2 \times 0{\cdot}787 \times 10^6 \times 2{\cdot}267^2/24 = 21{\cdot}695 \times 10^8$

A-2.4 At Worst Load — f_1 = 50 percent UTS = 9 130 (2 × 2·615 5)

= 1 745 kg/cm² [— 18°C, ice + wind] T_1 = 4 565 kg

Sag = 305² × 0·372 × 2·963/8 × 1 745 = 7·345 m (deflected)

∴ = 305² × 0·372 × 2·267/8 × 1 745 = 5·620 m (vertical projected)

Swing P/W = 1·856/2·206 = 0·841; θ = 40° from vertical

K = 1 745 — (37·061 × 10⁸)/1 745³ = 528

A-2.5 Sag at —18°C; Without Wind Load with Ice Load:

f^2 [f — (528 — 0)] = 21·695 × 10⁸ or f = 1 496·6 kg/cm²;
t = 3·914 kg

∴ Sag = 305² × 0·372 × 2·267/(8 × 1 496·6) = 6·553 m

A-2.6 Sag at 0°C, Without Wind Load, With Ice Load:

f_2 [f — (528 — 251)] f = 21·695 × 10⁸

∴ f = 1 395·7 kg/cm²; t = 3 650 kg

Sag = 305² × (0·372 × 2·267)/(8 × 1 395·7) = 7·026 m

A-2.7 Sag at 0°C, Without Wind Load, Without Ice Load:

f^2 [f — (528 — 251)] = 4·221 3 × 10⁸

∴ f = 856·9 kg/cm²; t = 2 241 kg

Sag = 305² × 0·372/(8 × 856·9) = 5·048 m

A-2.8 Sag at 32°C, Without Wind Load:

f^2 [f — (528 — 698)] = 4·221 3 × 10⁸

∴ f = 699 kg/cm² Tension = 1 928 kg < 25 percent UTS

Sag = 305² × 0·372/(8 × 699) = 6·189 m

A-2.9 Sag at 55°C, Without Wind Load:

$f^3 [f - (528 - 1\,019)] = 4{\cdot}220\,3 \times 10^8$

$\therefore f = 618{\cdot}3$ kg/cm²; $t = 1\,617$ kg

Sag $= 305^2 \times 0{\cdot}372/(8 \times 618{\cdot}3) = 6{\cdot}996$ m

A-3. CHECK FOR INITIAL TENSION AT EVERYDAY TEMPERATURE, NO LOAD

A-3.1 Factors

$\alpha\, tE32 = 17{\cdot}73 \times 10^{-6} \times 50 \times 0{\cdot}625\,7 \times 10^6 = 554$ (Initial)

Z (initial) $= 305^2 \times 0{\cdot}372^2 \times 0{\cdot}625\,7 \times 10^6/24 = 3{\cdot}356\,1 \times 10^8$

Z_1 (initial) $= 3{\cdot}356\,1 \times 10^8 \times 2{\cdot}963^2 = 29{\cdot}465 \times 10^8$

$K_1 = 1\,745 - (29{\cdot}465 \times 10^8)/1\,745^2 = 777{\cdot}4$

A-3.2 Tension at +32°C, No Wind Load:

$f^2 [f (777 - 554)] = 3{\cdot}356\,1 \times 10^8$

$\therefore f = 778$ kg/cm² + $T = 2\,034$ kg < 35 percent UTS

A-4. TABULATION

ACSR Conductor 30/7/3·0 mm

(Span 305 m)

Temperature	*Loadings*		*Limiting Load Percent Ultimate Tensile Strength*	*Tension*	*Sag*
	Wind	Ice			
(1)	(2)	(3)	(4)	(5)	(6)
°C	kg/m²	mm (thick)		kg	m
−18	1·0 × 40	12·7	50	4 565	7·345 (deflected)
,,	,,	,,	,,	,,	5·620 (vertical)
−18	nil	,,	—	3 914	6·553 (projected)
0	,,	,,	—	3 650	7·026
0	,,	nil	—	2 241	5·048
+32	,,	,,	25 (*F*)	1 828	6·189
+32	,,	,,	35 (*I*)	2 034	—
+55	,,	,,	—	1 617	6·996

AMENDMENT NO. 1 JULY 1994
TO
IS 5613 (Part 2/Sec 1) : 1989 CODE OF PRACTICE FOR DESIGN, INSTALLATION AND MAINTENANCE OF OVERHEAD POWER LINES

PART 2 LINES ABOVE 11kV AND UP TO AND INCLUDING 220 kV

Section 1 Design

(First Revision)

(*Page* 4, *clause* 3) — Insert the following and renumber subsequent clause.

'*4.2* For the safety requirement of low flying Military Aircrafts, all the transmission lines and transmission line structures falling within the safety zone of airfields and air to ground firing ranges shall meet the requirements of Directorate of Flight Safety, Air Headquarters given in Annex A '

(*Page* 29, *Annex* A) -- Insert the following Annexure and renumber the subsequent Annexes

ANNEX A

(*Clause* 4 2)

VISUAL AIDS FOR DENOTING TRANSMISSION LINES AND TRANSMISSION LINE STRUCTURES — REQUIREMENT OF DIRECTORATE OF FLIGHT SAFETY

All the Power Utilities shall comply with the following :

a) The transmission lines and transmission line structures of height 45m and above shall be notified to the Directorate of Flight Safety (DFS), Air Headquarters (Air HQ), New Delhi.

b) For construction of any transmission line/structure or a portion thereof, falling within a radius of 20 km around the Defence aerodromes and air to firing ranges provisions of the Aircraft Act 1934, Section 9A as amplified by the associated Gazette Notification SO 988 Part II, Section 3, Subsection (ii) dated 1988-03-26 shall be complied with Towards

this, a No Objection Certificate (NOC) shall be obtained from the concerned aerodrome authorities.

c) Within a radius of 10 km around aerodromes and air to ground firing ranges, all transmission lines and structures of height 45 meters or more shall be provided with day and night visual aids.

d) In all other areas, outside a radius of 10 km from aerodromes, only those portions of transmission lines and structures of any height identified to pose a hazard to aircraft by the Directorate of Flight Safety shall be provided with day visual aids.

2. DESCRIPTION OF VISUAL AIDS

2.1 Day Marking

i) *Line Markers* — Coloured globules of 40-50 cm diameter made of reinforced fibre glass or any other suitable material, weighing not more than 4.5 kg each with suitable clamping arrangement and drainage holes shall be installed on the earth wire(s) in such a manner that the top of the marker is not below the level of the earth wire. Up to 400-metre span, one globule shall be provided in the middle of the span on the highest earth wire. In case of double earth wires, the globule may be provided on any one of them. For span greater than 400-metres, one additional globule may be provided for every additional 200-metre span or part thereof. Half orange and half white coloured globule should be used. A typical sketch of marker is given in Fig. 1.

ii) *Structure Marking* — The structure portion excluding cross-arms above 45 m height shall be painted in alternate bands of international orange and white colours. The bands shall be perpendicular to the vertical axis and the top and bottom bands shall be orange. There shall be an odd number of bands. The maximum height of each band shall be 5 m. A typical sketch of marking a structure is given in Fig. 2.

2.2 Night Marking

2.2.1 Medium and low intensity obstacle lights as per Fig. 3 on a complex obstacle such as towers supporting overhead wires should have a night time intensity as per ICAO requirements in International Standards recommended practices. The light on top of the structure should flash at the rate of 20 sequences per minute.

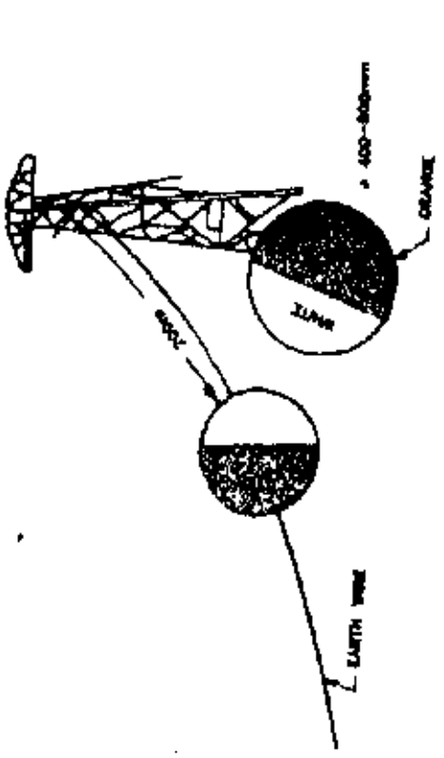

S.No.	Span length in m	No. of globules
1	UPTO 400	
2	FROM 401 TO 600	
3	FROM 601 TO 800	
4	FROM 801 TO 1000	
5	FROM 1001 TO 1200	

NOTE: Globules between platform in any case should not exceed 200 metres

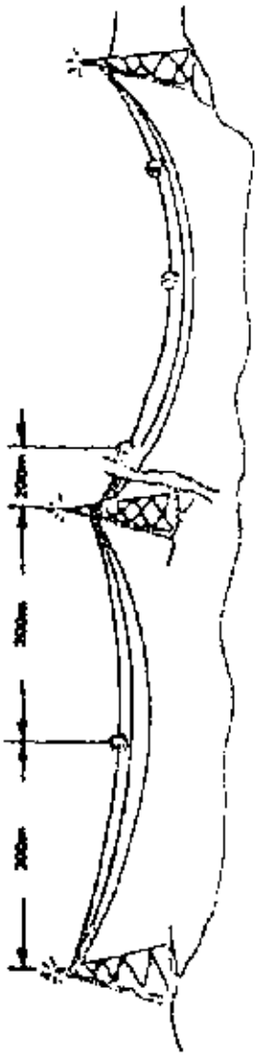

FIG. 1 WARNING WIRE GLOBULES

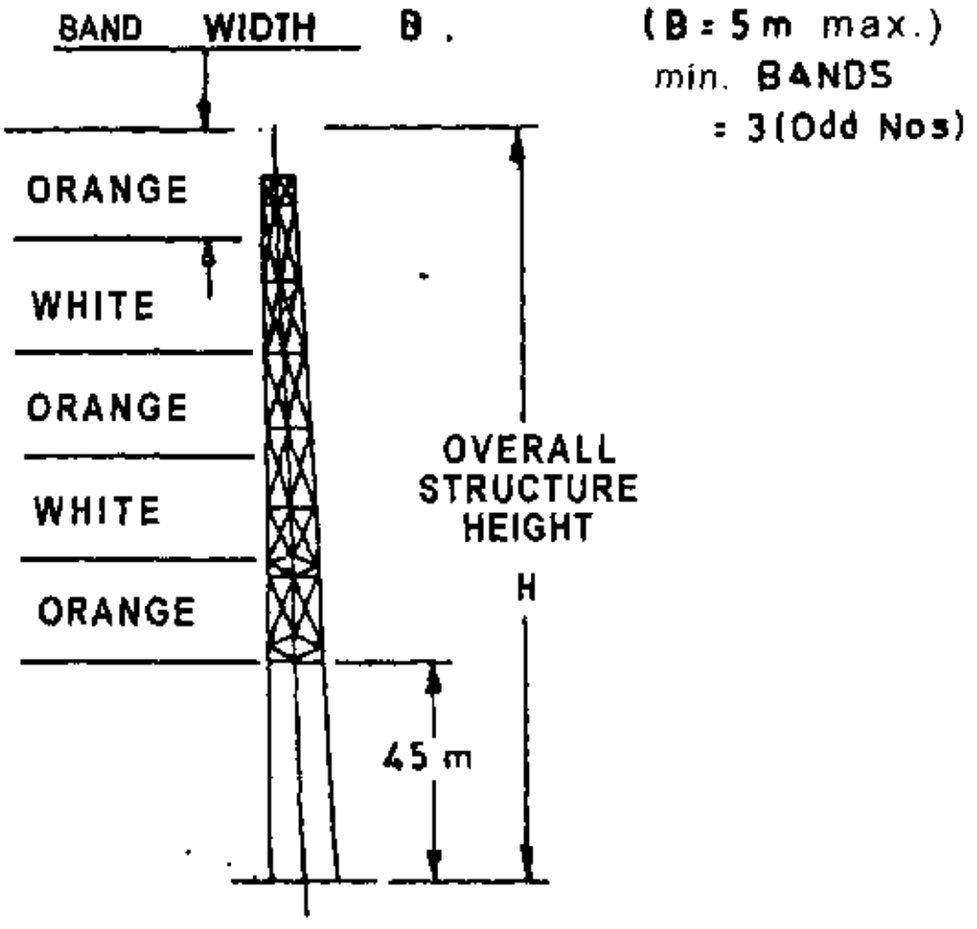

FIG. 2 DAY MARKING ALTERNATE BANDS

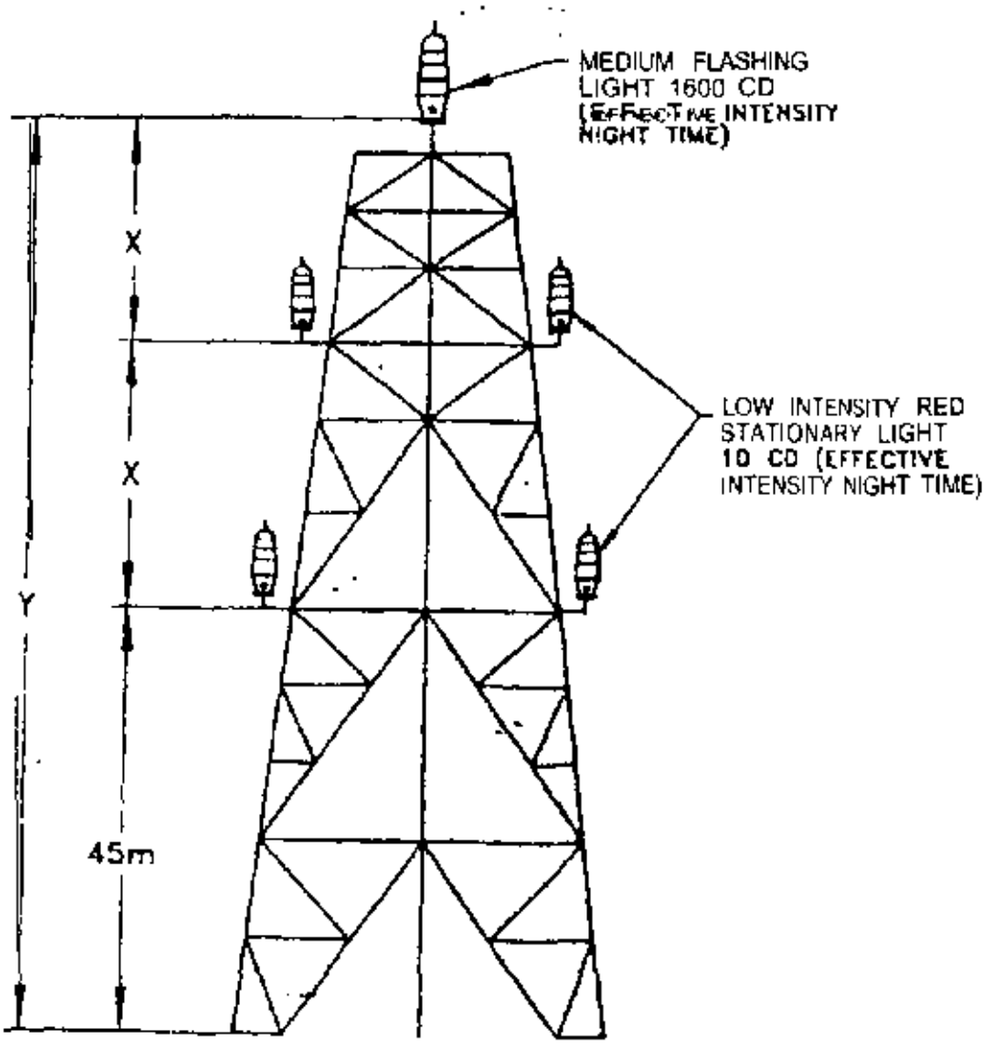

Number of Lights = $N = Y \frac{(\text{METRE})}{45}$

Light Spacing = $X = \leq 45$

FIG. 3 NIGHT MARKING OF POWER TRANSMISSION TOWER

(ETD 37)

Reprography Unit, BIS, New Delhi, India

BUREAU OF INDIAN STANDARDS

Headquarters:

Manak Bhavan, 9 Bahadur Shah Zafar Marg, NEW DELHI 110002

Telephones : 331 01 31, 331 13 75 — Telegrams : Manaksanstha (Common to all offices)

Regional Offices:		*Telephones*
Central	: Manak Bhavan, 9 Bahadur Shah Zafar Marg, NEW DELHI-110002	331 01 31 331 13 75
*Eastern	: 1/14 C.I.T. Scheme VII M, V. I. P. Road, Maniktola, CALCUTTA 700054	36 24 99
Northern	: SCO 445-446, Sector 35-C, CHANDIGARH 160036	2 18 43 3 16 41
Southern	: C. I. T. Campus, MADRAS 600113	41 24 42 41 25 19 41 29 16
†Western	: Manakalaya, E9 MIDC, Marol, Andheri (East), BOMBAY 400093	6 32 92 95
Branch Offices:		
'Pushpak' Nurmohamed Shaikh Marg, Khanpur, AHMEDABAD 380001		2 63 48 2 63 49
‡Peenya Industrial Area, 1st Stage, Bangalore Tumkur Road BANGALORE 560058		38 49 55 38 49 56
Gangotri Complex, 5th Floor, Bhadbhada Road, T. T. Nagar, BHOPAL 462003		6 67 16
Plot No. 82/83, Lewis Road, BHUBANESHWAR 751002		5 36 27
53/5, Ward No. 29, R. G. Barua Road, 5th Byelane, GUWAHATI 781003		3 31 77
5-8-56C L. N. Gupta Marg (Nampally Station Road), HYDERABAD 500001		23 10 83
R14 Yudhister Marg, C Scheme, JAIPUR 302005		6 34 71 6 98 32
117/418 B Sarvodaya Nagar, KANPUR 208005		21 68 76 21 82 92
Patliputra Industrial Estate, PATNA 800013		6 23 05
T.C. No. 14/1421, University P.O., Palayam TRIVANDRUM 695035		6 21 04 6 21 17
Inspection Office (With Sale Point) :		
Pushpanjali, 1st Floor, 205-A West High Court Road, Shankar Nagar Square, NAGPUR 440010		2 51 71
Institution of Engineers (India) Building, 1332 Shivaji Nagar, PUNE 411005		5 24 35

*Sales Office in Calcutta is at 5 Chowringhee Approach, P.O. Princep Street, Calcutta 700072 — 27 68 00

†Sales Office in Bombay is at Novelty Chambers, Grant Road, Bombay 400007 — 89 65 28

‡Sales Office in Bangalore is at Unity Building, Narasimharaja Square Bangalore 560002 — 22 36 71

Printed at Simco Printing Press, Delhi, India